HITACHI

FLORA 220W NS3

3

[illegible]

[illegible]

■[illegible]1[illegible] [illegible]
[illegible]

■[illegible]2[illegible] [illegible]
[illegible]

■[illegible]3[illegible] [illegible]
[illegible]

■[illegible]4[illegible] [illegible]
[illegible]

[illegible]

重要	[illegible]
ヒント	[illegible]
参照	[illegible]

[illegible] Windows XP [illegible]

[illegible]

[illegible]

1 [illegible] 3
[illegible] 4
[illegible] 4
[illegible] 5
[illegible] 7
[illegible] 7
[illegible] 8
[illegible] 9
[illegible] 9
[illegible] 10
[illegible] 11
[illegible] 11
[illegible] 12
[illegible] 13

2 [illegible] 15
[illegible] 16
[illegible] 17
[illegible] 17
[illegible] 18
[illegible] 22
[illegible] 22
[illegible] 23
[illegible] 23
[illegible] 24
[illegible] 25
[illegible] 25
[illegible] 26
PC [illegible] 27
[illegible] 27
[illegible] 28
USB [illegible] 31
[illegible] 31
IEEE1394 [illegible] 32
[illegible] 32
[illegible] 33
[illegible] 33

34
34
35
38
41
44
45
46

3 47
48
48
48
49
50
50
50

4 51
52
52
53
54
55
56
58
58
58
58
59
67
67
67
68
68
69
69

70

1

[illegible]

[illegible]

[illegible]

[illegible]

重要

◎ [illegible] 40% [illegible]

1 [illegible]

2 [illegible] 1 [illegible]

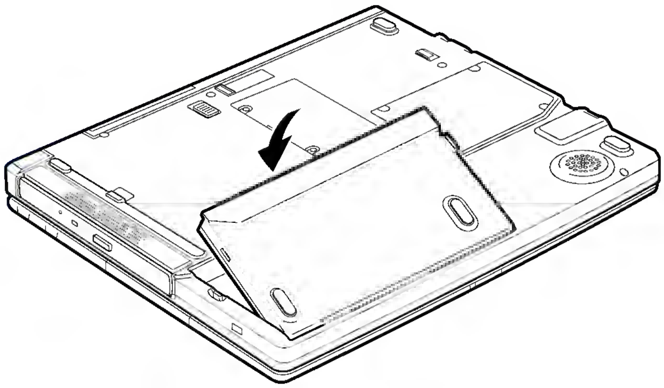

[illegible]

[illegible] 1 [illegible]

1 [illegible] AC [illegible]

2 □□□□□□□□□□ 2□□□□□□□□□□□□□□□□□□□□□□
□□□□□□□□□

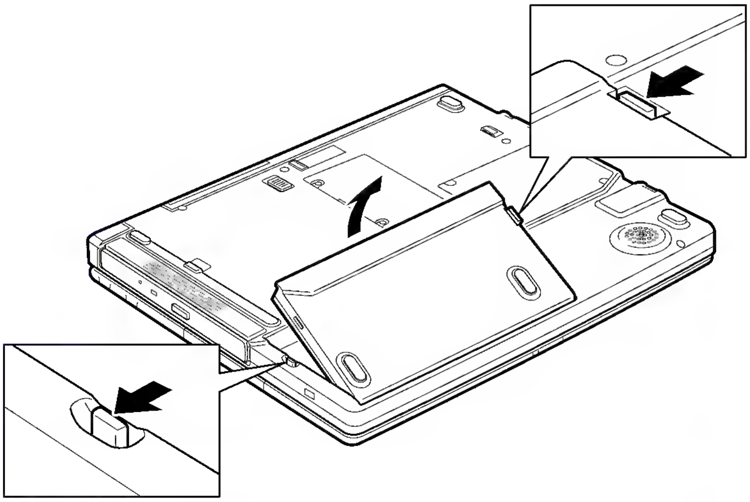

□□□□□□□□□□□□□□□□□

□□□□□□

1 □□□□□□□□□□□□□□□□□□□□

2 □□□□□□□□□□□□□□□□□□□□□□□□

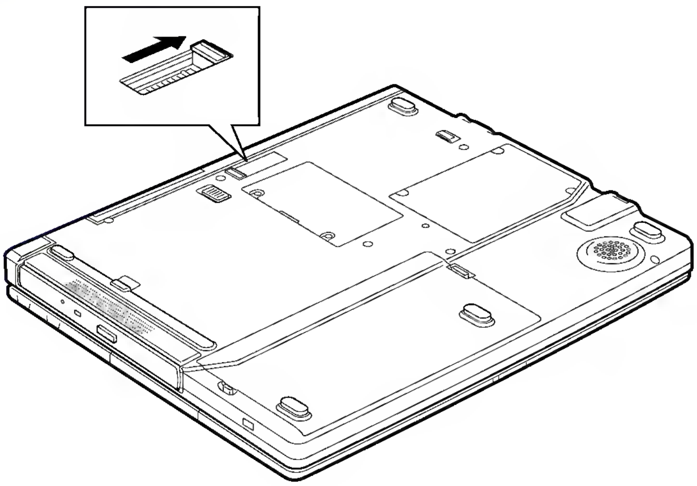

3 □□□□□ 2□□□ 2□□□□□□□□□□□□□□□□□□□□□
□□□□「□□□」□□□□□□□□□□□□□

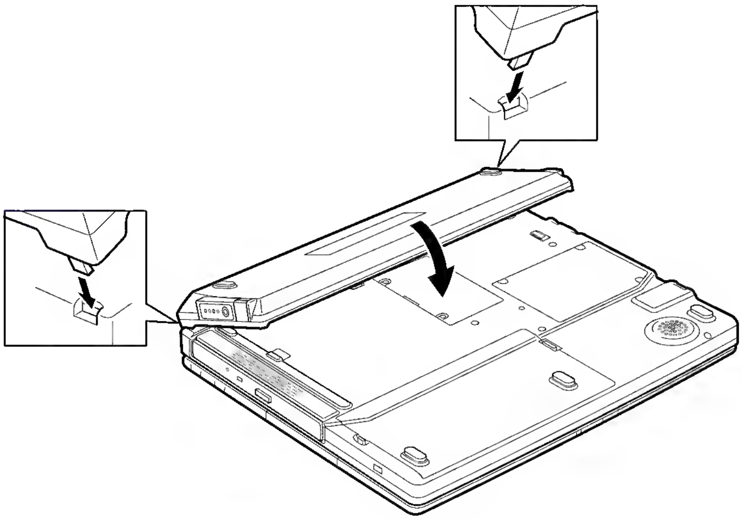

□□□□□□

□□□□□ 2□□□□□□□□□□□□□□□□□□□□□

1 □□□□□□AC□□□□□□□□□□□□□□□□□□□□

2 □□□□□□□□ 2□□□□□□□□□□□□□□□□□□□□ 2□
□□□□□

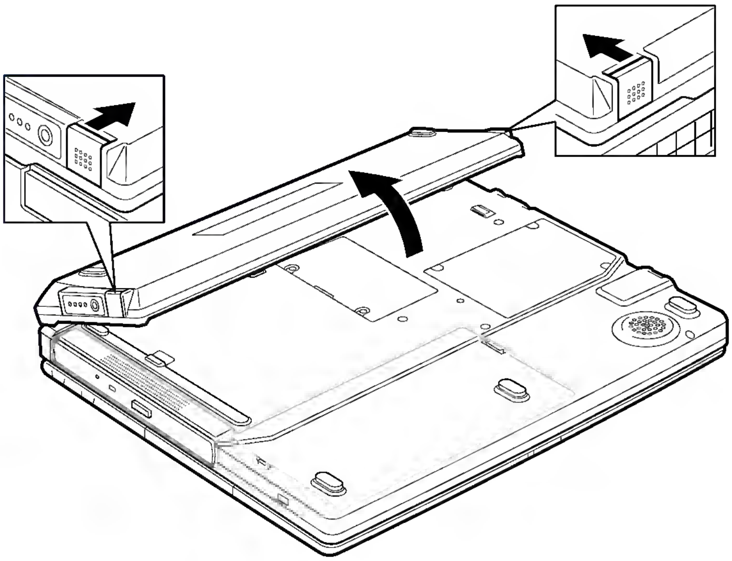

重要

◎ □□□ 40%□□□□□□□□□□□□□□

□□□□□□□□

□□□

1 □□□□□□□□□□□□□□□□□□□□□□□□□□□□□□□□□□□□□□

2 AC□□□□□□□□□□□□□□□□□□□□□□□□

□ □□

□□□□

□□□□□□□□□□□□□□□□□□□□□

Windows XP		□□□□□□□□□□ □□□□□□	□□□□□□□□□□ (□□□□□□□□□)
Pentium III 1GHZ	□□□□□□	□2.0□3.0□□	□4.0□5.0□□
	□□□□□□1 + □□□□□□2	□5.0□7.0□□	□8.0□10.0□□
Celeron 1GHz	□□□□□□	□2.0□3.0□□	□4.0□5.0□□
	□□□□□□1 + □□□□□□2	□5.0□7.0□□	□8.0□10.0□□

□

警告

◎ □□□□□□□□□□□□□□□□□□□□□□□□□□□□□□□□□□

◎ □□−□□□□□□□□□□□□□□□□□□□□□□□□□□□□□□□□□□□□

参照

□□□□□□□□□□□□□□□□→□□□□□□□□□□□□□□□□□□□□□□□□□□

重要

◎ □□□□□□□□□□□□□□□□□□□□□□□□□□(□□□□□□□)□□Windows□□□

ヒント

★ □□

★ □□

★ □□

重要

◎ □□□□□□□□□□□□□□□□□□□□□□□□□□□□□□□□□AC□□□□□□□□□□□□□□□□□□□□□□□□□□□□□□□□□□□□□□

[illegible]

[illegible]

[illegible]

[illegible]

[illegible]

[illegible]
[illegible] 90[illegible] 100%[illegible]

[illegible]

[illegible]

[illegible]

Windows XP		[illegible]		
		Windows [illegible] *1	DVD [illegible] *2	JEITA [illegible] *3
Pentium III 1GHz	[illegible]	[illegible] 3.1 [illegible]	[illegible] 2.0 [illegible]	[illegible] 3.5 [illegible]
	[illegible] 1 + [illegible] 2	[illegible] 6.6 [illegible]	[illegible] 4.4 [illegible]	[illegible] 7.2 [illegible]
Celeron 1GHz	[illegible]	[illegible] 3.2 [illegible]	[illegible] 1.7 [illegible]	[illegible] 3.3 [illegible]
	[illegible] 1 + [illegible] 2	[illegible] 6.7 [illegible]	[illegible] 3.8 [illegible]	[illegible] 6.7 [illegible]

[illegible] 1: WindowsXP [illegible] Windows [illegible] HDD [illegible] CD-ROM [illegible]
Windows2000 [illegible] Windows98 [illegible] 80 [illegible] 90% [illegible]
[illegible] DVD [illegible]
[illegible] - [illegible] 2
[illegible]

[illegible] 2: DVD [illegible]

[illegible] 3: JEITA [illegible] PC [illegible]
[illegible] (Ver1.0) [illegible] JEITA [illegible] http://it.jeita.or.jp/mobile/
JEITA [illegible]
[illegible] [illegible]]
(1) [illegible]]
(2) [illegible]] [illegible]]
(3) [illegible]] ,
(4) [Intel(R) Speedstep(TM) technology [illegible]
(Windows2000, Windows98 PentiumIII [illegible])

[illegible]
(1) [illegible] (
(2) [illegible] (Windows [illegible])
(
PC8NS3-HKG4H1110 PC8NS3-HLG4H1110

重要

◎ [illegible]

参照

→

[Fn] [F6]( )

[ ]([ ])

[ ]

Windows [ ] [ ]

1 [ ] [ ]

[ ]

2 [ ]([ ])

[ ]([ ])

[ ]

1 [ ]([ ]) [ ]

[ ]

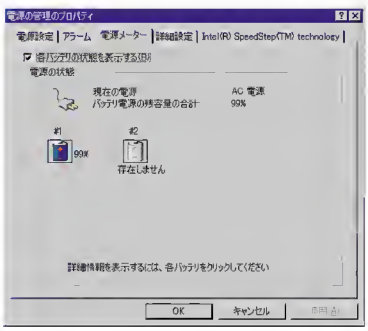

Windows 98

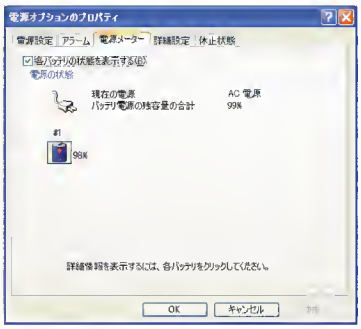

Windows XP

ヒント

★ OS [ ] [ ]

[ ]

Windows 98/XP

ヒント

★ Windows XP [ ] [ ]

★ [ ] [ ]

★

★

★

★ 90 100

Windows 98

1

2

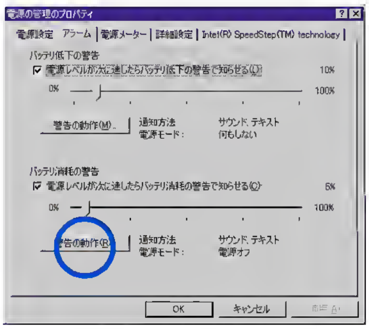

Windows 98

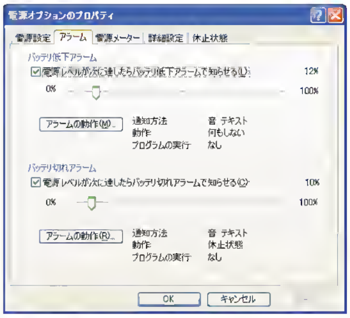

Windows XP

3

[OK]

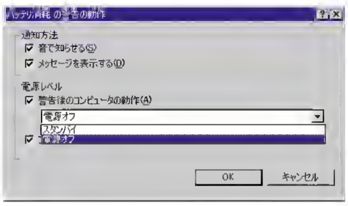

Windows 98

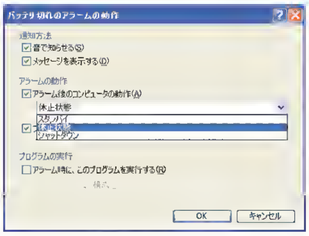

Windows XP

4

重要

◎

◎ DVD

重要

◎ Windows 98

1(AB6600)

 1
AC
AC
CPU

2(AB6610)

AC
1
2 3

ヒント

★ 1
2

重要

◎ 1

参照

→ 4
(P. 67)

AC

AC
AC
AC

1

15% 40%
1 40%

Press <F12>to enter Boot Menu [F2]

1

2 AC

3

4

重要

◎

◎

2□

□□□□□□□□□

□□□□□□□□□□□□□□□□□□□□□□□□□□□

[illegible]

[illegible]

重要

◎ [illegible]

[illegible]	[illegible]	[illegible]
[illegible]	[illegible]	–
[illegible]	[illegible]	[illegible]
[illegible]	[illegible] ([illegible]) [illegible]	参照 [illegible] 4 [illegible] 参照 [illegible] (P.34) [illegible] (P.38)
[illegible]	[illegible]	参照 [illegible] 4 [illegible]
PC [illegible]	[illegible]	–
[illegible]	[illegible]	参照 [illegible] 4 [illegible]
LAN	BIOS [illegible]	参照 [illegible] 4 [illegible]
USB [illegible]	[illegible]	–
IEEE1394 [illegible]	[illegible]	–

[illegible] ([illegible]) [illegible]

USB

Windows 98

1 USB USB

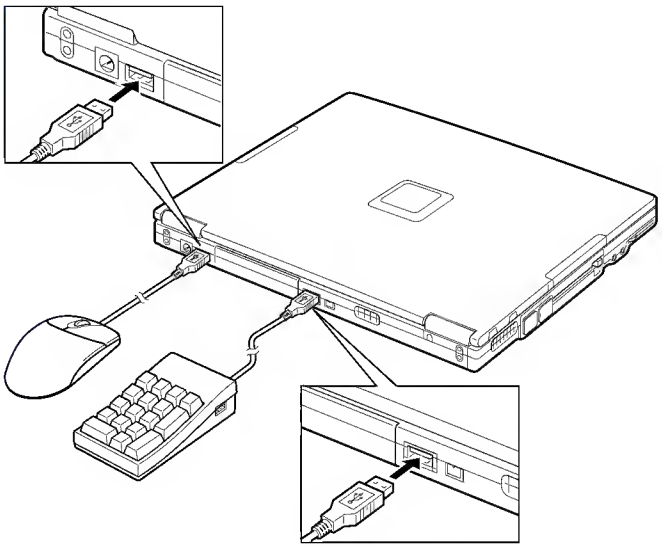

USB

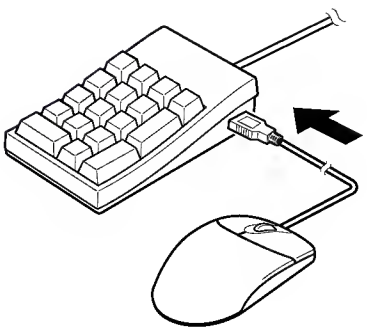

参照

(Windows 98 → 3

重要

◎

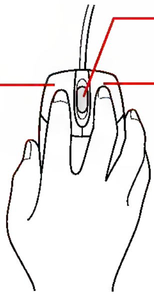

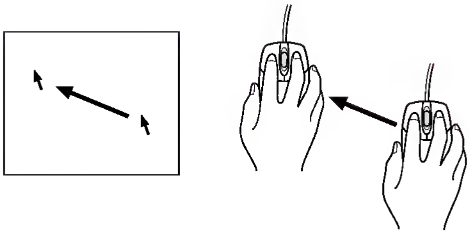

重要

1

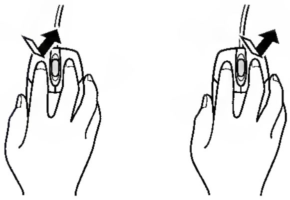

2

ヒント

参照

→

1

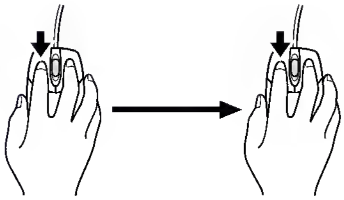

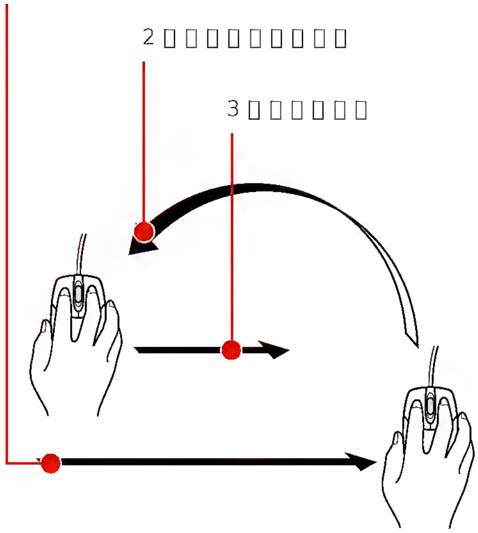

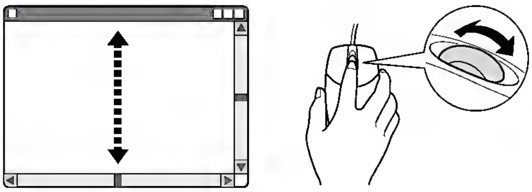

●(Windows 98)

[Shift] [Ctrl]

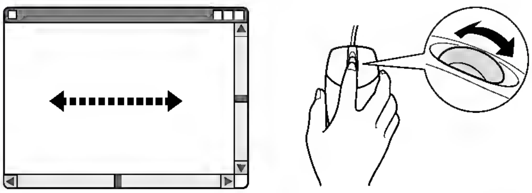

●(Windows 98)

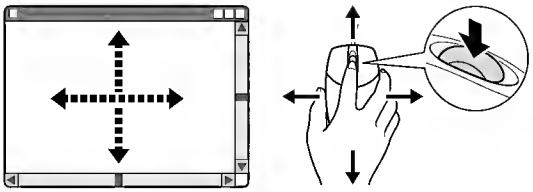

●(Windows 98)

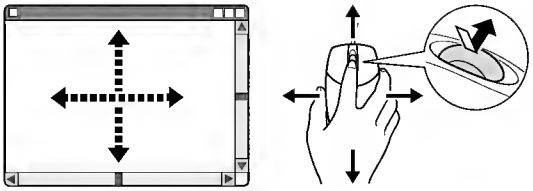

Windows 98

MS Office MS Office

Windows 2000 Windows XP

Office 97 Office 97

ヒント

★ [ ] [ ]

★ [Shift] Web [ ] [ ]

[illegible]

1 [illegible]

2 [illegible]

3 [illegible]

4 [illegible]

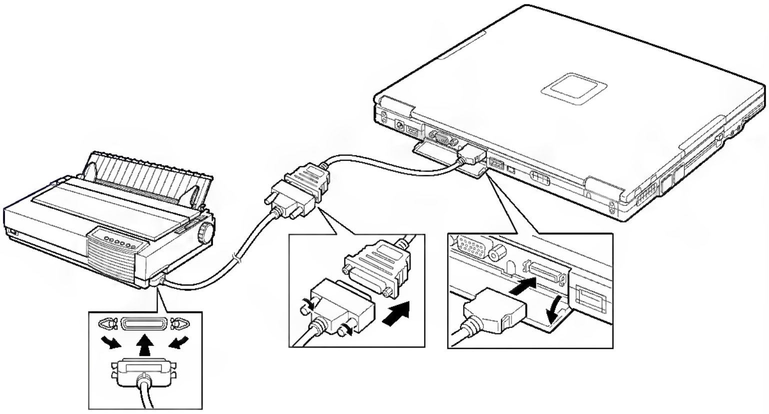

ヒント

★ [illegible]

参照

[illegible] → 4[illegible] (P. 59)

ヒント

★ SCSI [illegible]

参照

[illegible] → 4 [illegible] (P. 59)

[illegible]

[illegible]

[illegible]

[illegible] Windows [illegible]
[illegible]
([illegible]) [illegible]
[illegible]

1 [illegible] FAX [illegible]

- [illegible]]

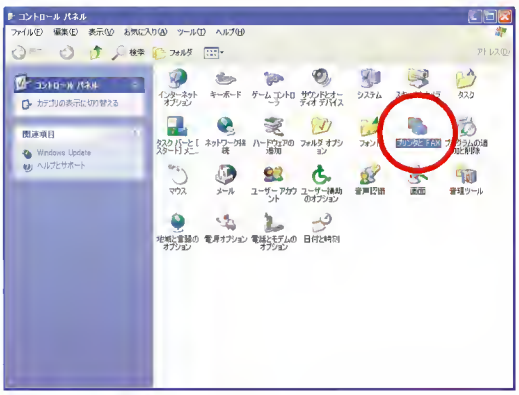

2 [illegible] [illegible]

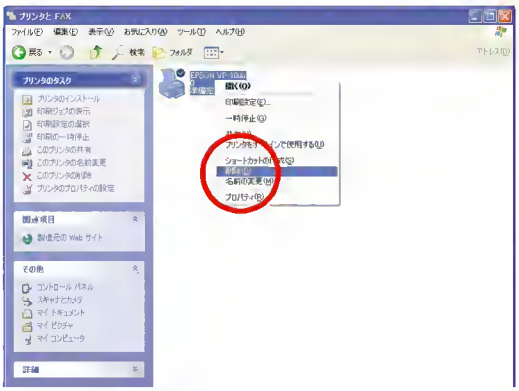

3 [ ] ([OK])

[ ]

[ ]

1 FAX

[ ]

2 [ ]

[ ]

1 [ ] [ ]

[ ]

2 [OK]

ヒント

★ [OK]

BGM

1

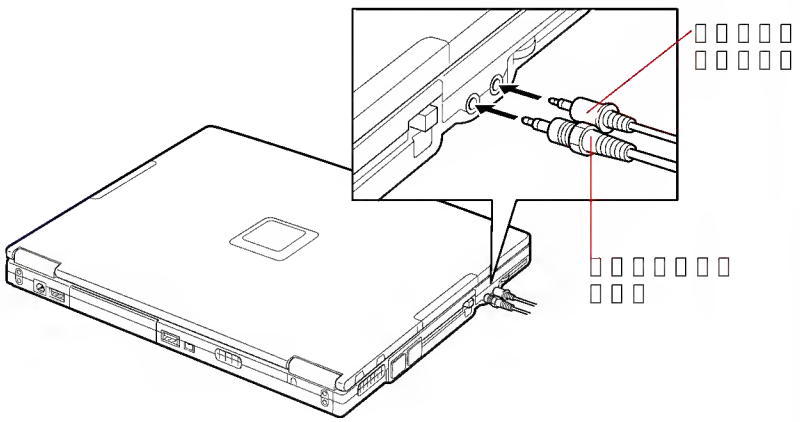

重要

-

[illegible]

[illegible]
[illegible] Windows [illegible] [[illegible]] [illegible]

1 [[illegible]] [illegible] [[illegible]] [illegible] [[illegible]] - [[illegible]] - [[illegible]] - [[illegible]] [illegible]

[illegible] [[illegible]] [illegible]

2 [illegible]

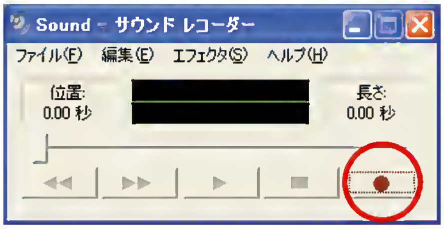

3 [illegible]

4 [illegible]

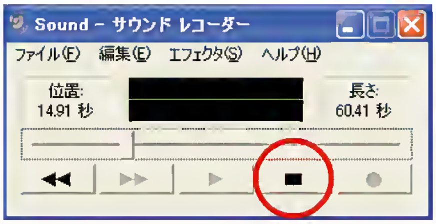

参照

[illegible] → [illegible] 1 [illegible]

ヒント

★ [illegible] WAV [illegible] [[illegible]] [illegible] [[illegible]] [illegible]

重要

◎ [illegible]

PC

Card Bus JEITA Ver 4.2 PCMCIA2.1
PC 1 PC SCSI

1

2 PC PC

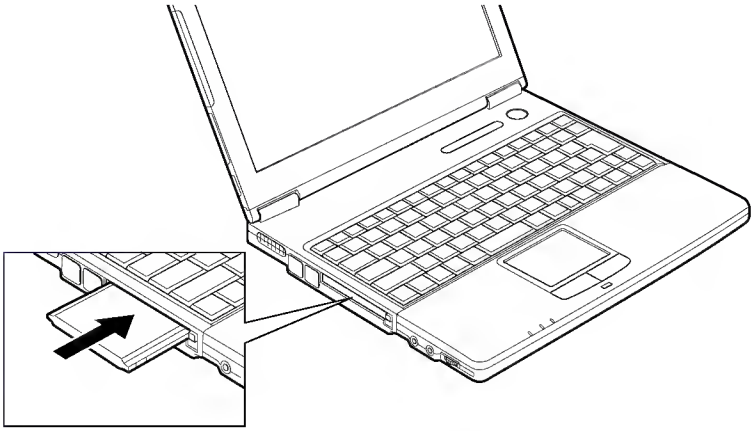

参照

→ 4

重要

- PC CardWizard PC
- TypeIII PC
- PC PC PC
- PC
- PC

□□□□□□

Windows 2000□XP□□□

1 [□□□□□□]□[□□□□□□□□□□□□□□□□□□□□□□□]□□□□□□□□□□□□□□□□□□□□□

□Windows 2000□□□[□□□□□□]□[□□□□□□□□□□□□□□□□□□□□□□]□□□□□□□□□□□□□□□□□□□□□□

□[□□□□□□□□□□□□□□□]□□□□□□□□□□□

2 [□□□□□□□ □□□□□]□□□□□□□□□□□□□□□□□□□[□□□]□□□□□□□□□□□□□□

3 [□□□□□□□ □□□□□□□□□]□□□□□□□□□□□

4 □□□□PC□□□□□□□□□□□□□□□□□□[OK]□□□□□□□□□□□□□□□

5 [‘□□□□□’□□□□□□□□□□□□□□□□□□□□]□□□□□□□□□□□Windows XP□□□□□□□□□□□□□□□□□□□□□□□□□□□□□

□Windows 2000□□□‘□□□□□’□□□□□□□□□□□□□□□□□□□□□□□□□□□□□□□□□□□□

6 [OK]□□□□□□□□□□□□□□□□[□□□□□□□□□□□□□□□□]□□□□□[□□□]□□□□□□□□□□□□□□□□

□Windows 2000□□□[OK]□□□□□□□□□□□□□□□[□□□□□□□□□□□□□□□□]□□□□□[□□□□]□□□□□□□□□□□□□□□□

ヒント

★ □□□□Windows XP□□□□□□□□□□□□

7

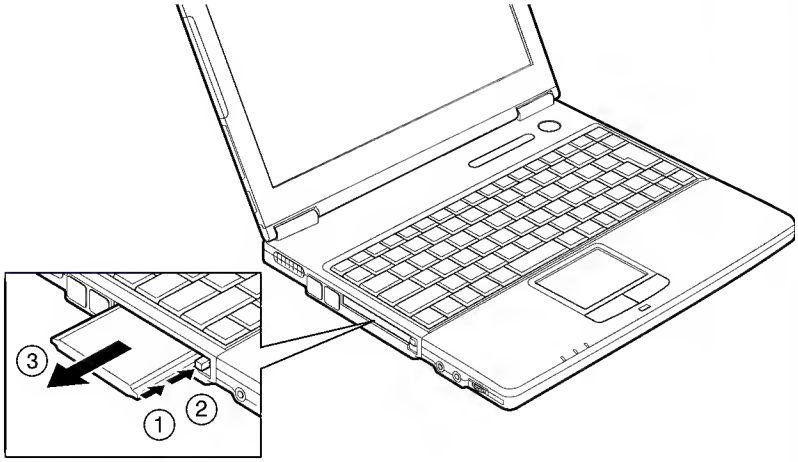

Windows 98

1 [ ] [PC (PCMCIA)]

2 [ ] 1 [ ]

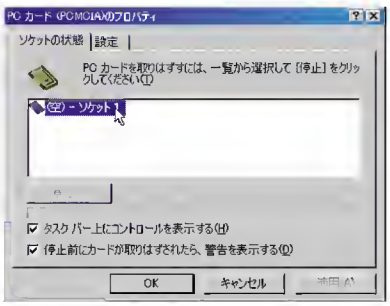

3 PC

4 PC

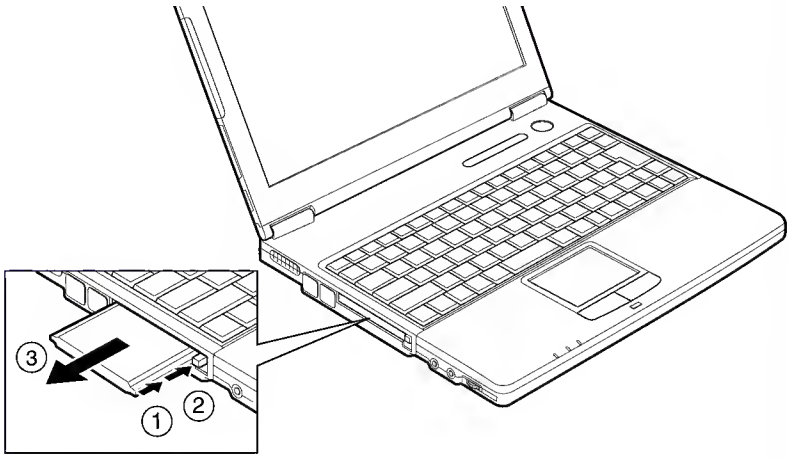

USB

USB(Universal Serial Bus)

USB

1

USB USB

USB

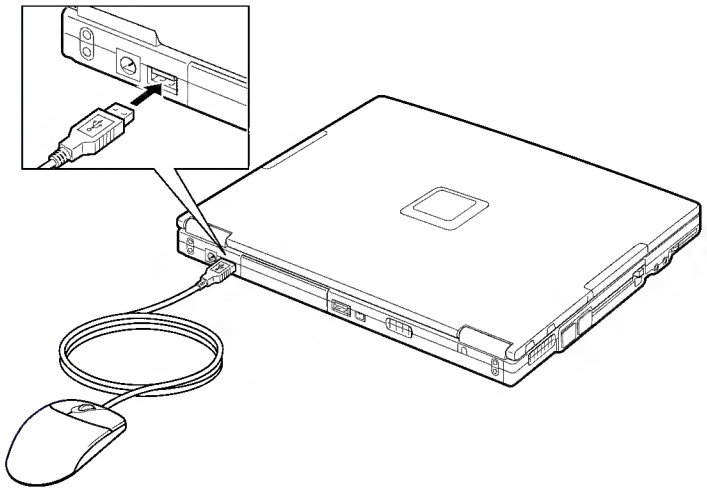

ヒント

★

★ USB [USB

IEEE1394

IEEE1394

IEEE1394

1

IEEE1394 4 IEEE1394

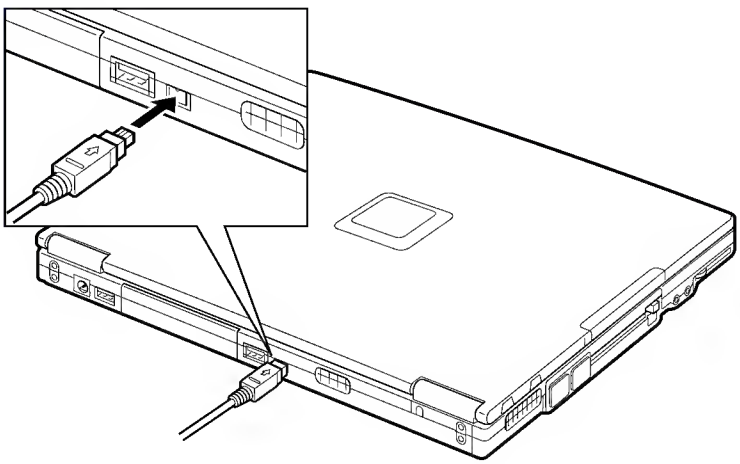

ヒント

★

★ IEEE1394 [1394

★ 6 IEEE1394

CD-ROM CD-R/RW DVD-ROM&CD-R/RW
CD-ROM DVD-ROM & CD-R/RW

1

2 CD-ROM

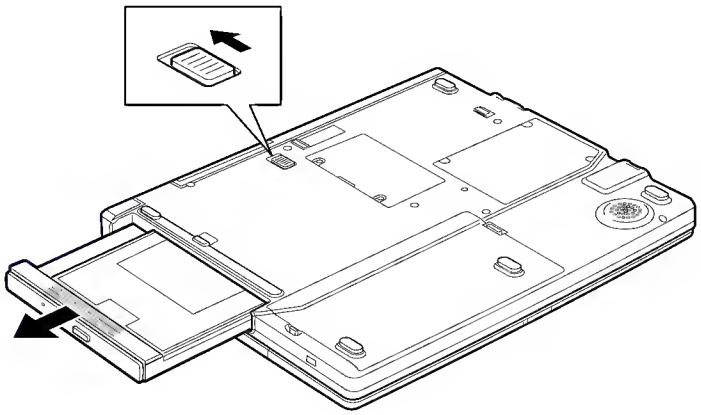

3 DVD-ROM & CD-R/RW

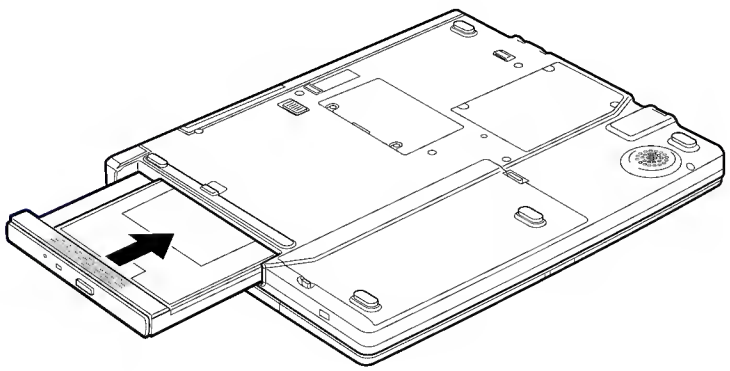

重要

-
-

□□□□□□□□□□□□□

□□□□□□□□□□□□□□□□□。□□□□□□□□□□□□□□
□□□□□□□□□（□□□□）□□□□□□□□□Windows XP□
Windows 98□□□□□1□□□□□2□□□□□□□□□□□□□
□□（□□□□□□□□□□□□）□□□□□

重要

◎ Windows 2000□□□□□□□
□□□□□□□□□□□□□

□□□□

1 □□□□□□□□□□□

2 □□□□□□□□□□□□□□。□□□□□□□□□□□□□□□□□□□□□□□□□□□□□□□□□□□□□

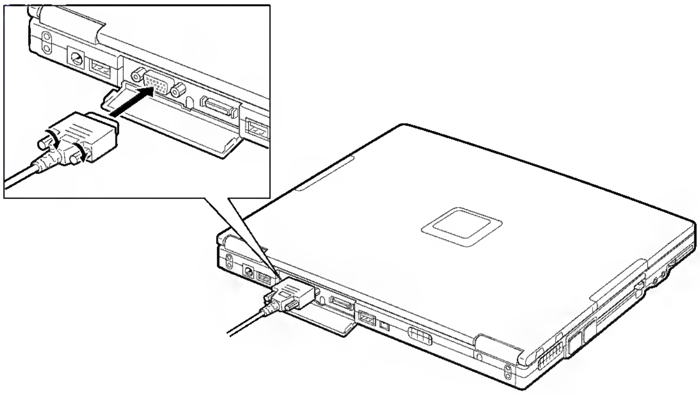

[illegible]

[illegible]

[illegible]

[Fn] [illegible] [F5] [illegible]

→ [illegible] → [illegible] → [illegible]

[[illegible]] [illegible]

[illegible]

■ Windows XP[illegible] 2000 [illegible]

1 [illegible]] [illegible] − [[illegible]] [illegible] [[illegible]] [illegible] [[illegible]] [illegible]

Windows 2000 [illegible] [[illegible]] [illegible] [[illegible]] − [[illegible]] − [[illegible]] [illegible]

[illegible] [[illegible]] [illegible]

2 [[illegible]] [illegible] [[illegible]] [illegible]

[illegible] Windows 2000 [illegible] [[illegible]] [illegible]

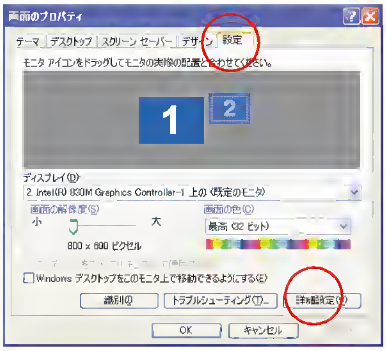

[illegible] [[illegible] Intel(R) 82830M Graphics Controller-...] [illegible]

重要

◎ [illegible]

◎ [illegible]

◎ [illegible]

重要

◎ Windows XP[illegible] Windows 2000 [illegible] [[illegible] D [illegible]] [illegible] [[illegible]] − [[illegible]] [illegible] [[illegible]] [illegible] [[illegible]] [illegible]

◎ Windows Media Player [illegible] [[illegible]] − [[illegible]] [illegible] [[illegible]] [illegible] [[illegible]] [illegible] [[illegible]] [illegible] [[illegible]] [illegible] [[illegible]] [illegible]

3 [Intel(R) Graphics Technology] [ ]

[Intel(R) 82830M Graphics Controller]

4 [Intel(R) 82830M Graphics Controller] [ ] [PC]

[PC]

5 [ ] [ ] [ ] [OK]

True Color
1024 × 768
60Hz

[ ]

6 [OK]

■Windows 98

1

2 [ ] [ ] [ ]

[ ]

3 [ ]

[Intel(R) 82830M Graphics Controller-...]

重要

◎

重要

◎

4 [Intel(R) Graphics Technology]□□□□□□□□□□[□□□□□□□□
□□□□□□□]□□□□□□□□□□□□□

5 [□□□□□]□□□□□□[PC□□□]□□□□□□□□□□□□□□

□ [PC□□□]□□□□□□□□□□□□□□□□

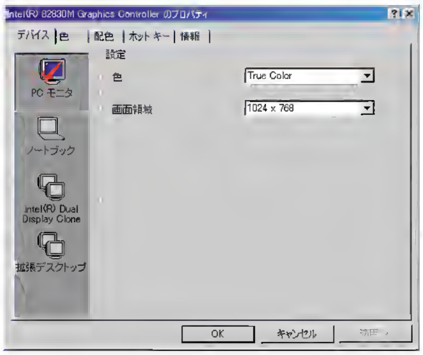

6 [□□□]□□□□□□□□□□□□□□□□□□□□□□□□□□□□□
□□[OK]□□□□□□□□□□□□□□

□□□□□□□□□□□□□□

□□(□□□□□□□□□□□□□□)□□□□□□□□□□□□□□□□□□
Windows XP□Windows 98□□□□□□□□□□□□□□□□□□□□□□□□□□□□□□□□□

■Windows XP□□□

1 □□□□□□□□□□□□□□□□□□□□□□□□□□□□□□□□□□□

2 [□□□□□□□□□□□□]□[□□□]□□□

□[□□□□□□□□□□□□□]□□□□□□□□□

3 [□□□□□]□□□□□□□□□□□□□□□[Intel(R) Graphics Technology]□□□□□□[□□□□□□□□□□□□□□□□□□□□]□□□□□□□□□□□□□□□□□□

□[Intel(R) 82830M Graphics Controller□□□□□□□□]□□□□□□□□□□

4 [Intel(R) 82830M Graphics Controller□□□□□□□□]□□□□[□□□□□]□□□□□[□□□□□□□□□□□□□]□□□□□□□□□□□□□□□□□□□□□□

□[□□□□□□□□□□□□□]□□□□□□□□□□□□□□□□□□□□□□□

5 [□□□□□]□□□□□□□□□□□□□□□□□□

□[□□□□□□□□□]□□□□□□□□□□

ヒント

★ □□□□□□□□□□□□□□□□□□□□□□□[Fn]□[F5]□□□□□□□□□□□□□□□□□□□□□□□□□□□□□□

重要

◎ Windows 2000□□□□□□□□□□□□□□□□□□□□□□□□□□□□□□□□□

◎ □□□□□□□□□□□□□□□□□□□3D□□□□□□□□□□□□□□□□□□□□□□□□IME□□□□□□□□□□□□□□□□□□□□□□□□□□□□□□

◎ □□□□□□□□□□□□□□□□□□□3D□□□

◎ □□□

◎ □□

6 [( )] [ ] [( )]
[ ] [OK]
High Color
1024x768

[Intel R 82830M Graphics Controller]

7 [OK]

[ ]

8 [OK]

■Windows 98

1

2 [ ] [ ]

[ ]

3 [ ]

[Intel(R) 82830M Graphics Controller-...]

4 [Intel(R) Graphics Technology] [

]

5 [ ] [ ]

[ ]

重要

◎ Windows XP
[ ]
OFF

重要

◎

6 [ ]
[OK]

□□□□□□□

□□□□□□□□□□□□□□□□□□□□□□□□□□□□□

■Windows XP□Windows2000□□□

1 □□□□□□□□□□□□□□□□□□□□□□□□□ [□□□□□□□□□□]□□□□□[□□]□□□□□□□

2 [□□□□□]□□□□□□□□□□□□□□[Intel(R) Graphics Technology]□□□□□[□□□□□□□□□□□□□□□□□□□□□□□]□□□□□□□□□□□□□□

Windows2000□□□[□□]□□□-[□□□□□□□□□□□□□□□□□]□□□□□□□□□□□

3 [Intel(R) 82830M Graphics Controller□□□□□□□]□□□□□[Intel(R) Dual Display Clone]□□□□□□□□□□□□□□□

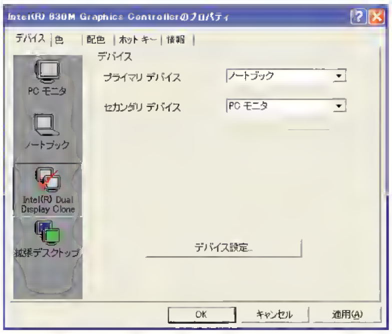

□ [Intel(R) Dual Display Clone]□□□□□□□□□□□□□□

4 [□□□□□]□□□□□□□□□□□□□□□□

□ [□□□□□□□□□]□□□□□□□□□□□□□

5 [□□□□□□□□□□□□□□□□□□□]□[□□□]□[□□□□□□□□□□□□□□□□]□[□□□]□□□□□□□□□□□□□□□□[OK]□□□□□□□□□□□□□□□□

□□□□□□□□□□□□□□□□□□□ □□High Color
□□□□□□1024×768
□□□□□□□□□□□□□□ □□□□□□□□□□□□□□60HZ

□ [Intel(R) 82830M Graphics Controller□□□□□□□]□□□□□□□

重要

◎ □□□□□□□□□□□□□□□□□□□□□□□□□□□□□□□1024×768□□□□□32□□□□□□□□□□□□□□□□

ヒント

★ [(□□□□□□□□)□Intel(R) 82830M Graphics Controller-*□□□□□□□]□[Intel(R) Graphics Technology]□□□□□□□□□□□□□□□□[□□□□□□□□□□□]□□□□□□□□□□□□□□□□□□□□□□□□□

6 [OK]

[ ]

7 [OK]

■Windows 98

1 [ ]

[ ]

2 [ ] [Intel(R) Graphics Technology]

[ ]

[Intel(R) 82830M Graphics Controller]

3 [ ] [Intel(R) Dual Display Clone]

[Intel(R) Dual Display Clone]

4 [ ]

[ ]

5 [ )] [ ] [ )]

[ ] [OK]

High Color

1024 × 768

60Hz

[Intel(R) 82830 Graphics Controller]

重要

◎

6 [OK]

[ ]

7 [OK]

[illegible]

[illegible]

[illegible] 1 [illegible]	[illegible] 2 [illegible]
640 × 480 *1	640 × 480 *1
	800 × 600
	1024 × 768
	1280 × 1024 *2
800 × 600	640 × 480 *1
	800 × 600
	1024 × 768
	1280 × 1024 *2
1024 × 768	640 × 480 *1
	800 × 600
	1024 × 768
	1280 × 1024 *2

[illegible] 1: Windows XP [illegible] 640 × 480 [illegible]
[illegible] 2: [illegible]

[illegible]

[illegible] Windows [illegible] [[illegible]] [illegible] [[illegible]] [illegible]

1 [illegible]

2 [illegible]

3 [illegible]

4 [illegible]

5 [[illegible]] [illegible] [[illegible]] [illegible]

[[illegible]] [illegible]

6 [[illegible]] [illegible] 2 [illegible]

[illegible]

7 [illegible]

8 [[illegible]] [illegible]

[illegible]

ヒント

★ [illegible]

★ [illegible]

ヒント

★ USB [illegible] IEEE1394 [illegible]

ヒント

★ [illegible] [[illegible]] [illegible]

LAN

(JATE)

LAN

ヒント

★

1

2 Mini PCI 3 Mini PCI

3 LAN

4 LAN

5 Mini PCI 3

6

3[illegible]

[illegible]

[illegible]

重要

◎

重要

◎

1　3　1

ヒント

★

1

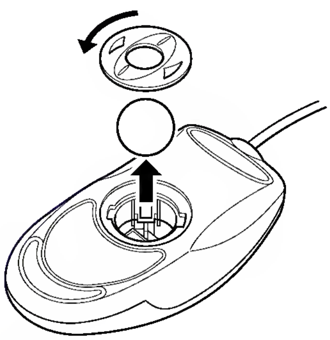

2

3

4

5

FDD

FDD 1 3 1

ヒント

★

★

[ ] - [( )] - [ ] - [ ]

1 [ ] - [( )] - [ ] - [ ] - [ ]

(Windows 98 [ ] - [ ] - [MS-DOS])

[ ]([MS-DOS])

2 FDD

3 dir [Enter]

4 [R] 4 5

(Windows XP Windows 2000 3)

5 exit [Enter]

(Windows 98 [A])

CD-ROM

CD-ROM

1

CD-R/RW

DVD-ROM&CD-R/RW

ヒント

★

重要

◎

ヒント

★

4

□□□□□□□□□□□□□

CD-ROM□□□□□□□

□□	□□
□□□□□□ □	□□ 24□□
□□□□□□	□□□□□□□□ 3□□□□□□□□□□ □□□□□□□□□
□□□□□□□□□□□□	□□□□□□□□□□□□(□□□□□) □□□□□□□□□
□□□□□	20□ 20kHz(0.5dB□－3.0dB)
□□□□□□□	2ch
□□□□□□□	LED
□□□□□□□□	128KB
□□□□□	□□ 3600KB/s
□□	□ 210g

□ □□□□□□□□□□□□□□□□□□□□□□□□□□□□□□□□□□□□□□□ □□□□□□□

□□□□□□ CD-ROM□□□□

□□ CD-ROM□□□□□□□□□
□CD-DA(□□□□□□ CD)
□CD-ROM(mode1□ mode2)
□CD-ROM XA(mode2□ form1□ form2)
□PhotoCD(□□□□□/□□□□□□□□□)
□CD-EXTRA(CD-Plus)
□VIDEO CD
□CD-R/RW

重要

◎ □□□□ CD-ROM□□□□□□□ □□□□□□□□□□

CD-R/RW□□□□□□□

□□	□□
□□□□□□ □	CD-ROM/R□□□ 24□□□CD-RW□□□ 16□□
□□□□□□	CD-R□□□ 16□□ CD-RW□□□ 10□□ (High Speed CD-RW□□□□□) □□ 4□□ (1□ 4□□ CD-RW□□□□□)
□□□□□□	□□□□□□ 3□□□□□□□□□□□□□□□□□ □
□□□□□□□□□□ □□	□□□□□□□□□□□ (□□□□)□ □□□□□□□
□□□□□	20□ 20kHz(±3.0dB)
□□□□□□□	2ch
□□□□□□□	LED
□□□□□□□□	2MB
□□□□□ (Read)	CD-ROM/R□□□ 3600KB/s□CD-RW□□□ 2400KB/s
□□□□□ (Write)	CD-R□□□ 2400KB/s, CD-RW□□□ 1500KB/s
□□	□ 280g
□□□□□	CD-R□□□□□(□)□□TDK(□)□□ □□□□(□)□□□□□(□)□□ (□)□□□□□□□□□□□(□)□ CD-RW□□□□□(□)□□(□)□□□□

□ □□□

■□□□□□□□□□□

□□□□□□□□□□□□□□
□CD-R
□CD-RW
□CD-DA(□□□□□ CD)
□CD-ROM(mode1□ mode2)
□CD-ROM XA(mode2□ form1□ form2)
□PhotoCD(□□□□/□□□□□□□□)
□CD-EXTRA(CD-Plus)
□VIDEO CD

重要

◎ □□□□□□□□□□□□□□□□□□□□□□□□□□□

◎ CD-R/RW□□□□□□□□□□□□□□□□□□□□□□□□□□□□□□□□□

◎ □□□□□□□□□□□□□□□□□□□□□□□□□□□□□□□□□□□□□□□

DVD-ROM&CD-R/RW□□□□□□□□□□

□□	□□
□□□□□□ □	DVD-ROM□ □□ 8□□ CD-ROM □ □□ 24□□
□□□□□□	CD-R□□□ 8□□ CD-RW□□□ 8□□ (High Speed CD-RW□□□□□) □□ 4□□ (1□4□□ CD-RW□□□□□)
□□□□□□	□□□□□□□3□□□□□□□□□□□□□□□□□□□□□□
□□□□□□□□□□□□	□□□□□□□□□□□□□(□□□□)□ □□□□□□□
□□□□□	20□20kHz(±3dB)
□□□□□□□	2ch
□□□□□□□□	2MB
□□□□□□Read□	DVD-ROM□ □□ 10800KB/s CD-ROM □ □□ 3600KB/s
□□□□□□Write□	CD-R : □□ 1200KB/s CD-RW: □□ 1200KB/s
□□	□ 340g
□□□□□□	CD-R: □□□□(□)□□ □□□□(□)□□□□□□(□)□□ (□)□□□□□□□□□□□□(□)□□ CD-RW: □□□□(□)□□(□)□□□□

□ □□□
□□□□□□□□

■□□□□□□□□□□□□

□□□□□□□□□□□□□□□□□□□□

- □CD-R
- □CD-RW
- □CD-DA(□□□□□□ CD)
- □CD-ROM(mode1□mode2)
- □CD-ROM XA(mode2□form1□form2)
- □PhotoCD(□□□□/□□□□□□□□□)
- □CD EXTRA(CD-Plus)
- □VIDEO CD
- □DVD-ROM
- □DVD-R□3.95GB□□□□□□□□
- □DVD-RAM
- □DVD-VIDEO

□□

◎ □□□□□□□□□□□□□□□□□□□□□□□□□□□□□

◎ CD-R/RW□□□□□□□□□□□□□□□□□□□□□□□□□□□□□□□□□□□

◎ □□□

□ □ □ □ □ □ □ □ □ □ □

2HD

□ □	1.44MB	1.25MB
□ □ □ □ □ □ □	80	77
□ □ □ □ □ (□ □ □)	512	1024
□ □ □ □ □ □ □ □ □ □ □ □ □ □ □ □	1	1
□ □ □ □ □ □ □ □	1	1
FAT □	2	2
□ □ □ □ □ □ □ □ □ □ □ □ □ □	224	192
□ □ □ □ □ □	2880	1232
□ □ □ □ □ □ □ □ □ □ □ □ □ □	F0	FE
□ □ □ − □ □ FAT	9	2
□ □ □ − □ □ □ □ □	18	8
□ □ □ □	2	2
□ □ □ □ □ □	0	0
□ □	R/W/F/B □	R/W □

□ □ □ □ □ □ □ □ □ □ □ □ R □ □ □ □ □ □ □ □ W □ □ □ □ □ □ □ □ F □ □ □ □ □ □ □ □ □ □ □ B □ FD □ □ □ □ □ □ □ □ □ □ □ □ □ □ □ □ □ □ FD □ □ □ □ □ □ □ □ □ □ □ □ □ □ □ □

2DD

□ □	720KB
□ □ □ □ □ □ □	80
□ □ □ □ □ (□ □ □)	512
□ □ □ □ □ □ □ □ □ □ □ □ □ □ □ □	2
□ □ □ □ □ □ □ □ □	1
FAT □	2
□ □ □ □ □ □ □ □ □ □ □ □ □ □	112
□ □ □ □ □ □	1440
□ □ □ □ □ □ □ □ □ □ □ □ □ □	F9
□ □ □ − □ □ FAT	3
□ □ □ − □ □ □ □ □	9
□ □ □ □	2
□ □ □ □ □ □	0
□ □	R/W/F/B □

□ □ □ □ □ □ □ □ □ □ □ □ R □ □ □ □ □ □ □ □ W □ □ □ □ □ □ □ □ F □ □ □ □ □ □ □ □ □ □ □ B □ FD □ □ □ □ □ □ □ □ □ □ □ □ □ □ □ □ □ □ FD □ □ □ □ □ □ □ □ □ □ □ □ □ □ □ □

ヒント

★ □ □ □ □ □ □ □ □ □ □ □

重要

◎ □ □ □ □ □ □ □ □ □ □ □ FD □ □ □ □ □ □ □ □ □ □ □ □ □ □ □ □ □

◎ □ FD □

◎ Windows XP □ □ □ 2DD □ FD □ □ □ □ □ □ □ □ □ □ □ □ □ □ □

[illegible]

CD-ROM [illegible] CD-R/RW [illegible] DVD-ROM&CD-R/RW [illegible] ([illegible]) [illegible]

[illegible]

- [illegible]
- [illegible]
- [illegible]
- [illegible]
- [illegible] ([Ctrl] [illegible] [Alt] [illegible] [Delete] [illegible]) [illegible]
- [illegible]
- [illegible] 5 [illegible] 35 °C [illegible] 30 °C [illegible]
- [illegible]
- [illegible]
- [illegible]
- CD-R/RW [illegible] CD-R/RW [illegible]
- [illegible] CD-R [illegible] CD-RW [illegible]
- CD-R/RW [illegible] CD-R [illegible] CD-RW [illegible]
- WAVE [illegible] AVI [illegible] FD [illegible]
- MS-DOS [illegible] 1.25MB [illegible] FD [illegible] Windows [illegible]
- FDD [illegible]

CD-ROM/CD-R/CD-RW/DVD-ROM

CD-RW 1000 1000

FD

FD

FD

FD

4 °C 53 °C

10 90%Rh( )

25 °C

FD

FD

FD

	MK7133 MK7259
	128MB/256MB
DRAM	SDRAM PC133
DIMM	SO-DIMM 144
	3.3V

	PC-AB6600	PC-AB6610
	3600mAh	
	11.1V	

	KM5430
	62mm(W) × 120.8mm(D) × 37.5mm(H)
	120g
	1000mm
	USB

ヒント

★

[illegible]

[illegible]

[illegible]	[illegible]	[illegible]	[illegible]	
[illegible]	[illegible]	DC1556	15[illegible]	
		DC1702	17[illegible]	
[illegible]	[illegible]	KB3450	USB[illegible] 17[illegible] USB I F[illegible]	
	[illegible]	KM5430	USB[illegible] 2[illegible] [illegible]	
	Link Stick	KX1100	[illegible] USB I/F	
[illegible]	[illegible]	MK7133	128MB[illegible] SDRAM SO-DIMM[illegible] PC133	
		MK7259	256MB[illegible] SDRAM SO-DIMM[illegible] PC133	
[illegible]	AC[illegible]	AP6600	AC[illegible]	
	[illegible] 1	AB6600	[illegible]	
	[illegible] 2	AB6610	[illegible]	
	[illegible]	AJ2100		
	[illegible] [illegible]	KC5700	[illegible] USB I/F	
	[illegible] [illegible] / [illegible] [illegible]	KC7000	[illegible]	2002/7[illegible]
	[illegible]	AZ2100		
	Bluetooth USB [illegible]	PC-CL3100	[illegible] USB I/F	
	Bluetooth [illegible]	CL5000	[illegible]	2002/7[illegible]
[illegible] ([illegible])	[illegible] [illegible]	FM1643	640MB[illegible] SCSI-2 I/F (PC[illegible] 1[illegible])	
		FM2130	1.3GB[illegible] SCSI-2 I/F (PC[illegible] 1[illegible])	
	USB FDD	UF2231	USB I/F	

□□	□□	□□	□□	
□□□□□□ (□□)	CD-ROM□□□□	UC6400	□□□□ □□24□□	
	CD-R/RW□□□□	UC6410	□□□□ CD-R □□□16□□ CD-RW □□□4□□ *1 □□□□ CD-ROM□□□24□□ CD-RW □□□16□□	
	DVD-ROM&CD-R/RW □□□□□□□	UC6420	□□□□ CD-R □□□8□□ CD-RW □□□4□□ *2 □□□□ CD-ROM□□□24□□ DVD-ROM□□□8□□	
	□□□□□□□□□□ □□□□/□□□□ □□□□	CZ3200	□□□□□□□□□□□SD □□□□□□□□□□□□□□ □□□□□□□□□□□□□ □□□□□□□□□□□□□ □□□□□□□	2002/7□□
PC□□□	□□ LAN□□□	CN3400		□3
□□□□	□□□□□□□□□□	AT1120		
	□□□□□□□□□□	PC-LMB010	USB I/F	
	PHS□□□□□□	PC-LMB020	USB I/F	
	H"(AirH"□□) □□□□□□	PC-LMB030	USB I/F	
	CDMA1□□□□□□	PC-LMB040	USB I/F	

□□

□1: High Speed CD-RW□□□□□□□□10□□□

□2: High Speed CD-RW□□□□□□□□8□□□

□3: □□ LAN□□□□□□□□□□□□□□□□□

		PD2080	75 / 136	4
		PD2130	125 / 136	4
		PD2161	160 / 136	4
		PD4080S	75 / 136	4
		PD4081	80 / 136	4
		PD4130	130 / 136	4
		PD3161	160 / 136	4
		PN5200	280 / 136	
		PN5400	500 / 136	
		PN5600	800 / 136	5
		PN5600P	800 / 136	5
		PL2170	16 / A4	4
		PL2450	20 / A3	4
		PL2560	22 / A3	4
		PL2700	32 / A3	4
		PL2810	40 / A3	4
		PK3000	6 / 24 / A3	
		PK3000N		
		PK3500N		
		PK2000	6 / 24 / A4	
		PK2000N		
		PK2500N		
		PK4700N	29 / 29 / A3	
		PK4800	12.5 / 50 / A3	4
		PL9120	1650 /	

		AS40801S	PD4080S	6
		PG40801S	PD4080S	
		PG4081	PD4081	7
		PG4130	PD4130	8
		AS40802S	PD4080S	
		AS4081	PD4081	7
		AS4130	PD4130	8
		AS3160	PD3160	
		AS1061	PD2080	
		AS3130	PD2130	
		AS2161	PA2161	
	LAN	PB20101	PD2080/ 2130/ 2161/ 4080S/ 4081/ 4130/ 3161 PN5200/ 5400/ 5600/ 5600P/ PL912	
	LAN	PB20111	PD2080/ 2130/ 2161/ 4081/ 4130/ 3161 PN5200/ 5400/ 5600/ 5600P	
	LAN	PB20301	PD2080/ 2130/ 2161/ 4080S/ 4181/ 4130/ 3161 PN5200/ 5400/ 5600/ 5600P PL9120	20
		AD10100	PD2080/ 2130/ 2161/ 4080S/ 4081/ 4130/ 3161	
		PF2170	PL2170	9
		PF2450	PL2450	10
		PF25501	PL2560	11
		PF25502	PL2560	11
		PF4300	PL2700	12 13
		PF27002	PL2700	12 13
	1	PF28101	PL2810	
	3	PF28103	PL2810	
		PF28105	PL2810	
		PF48001	PK4800	
		PB2700	PL2700	13
		PH27001	PL2700	12 13 14
	7	PH27002	PL2700	12 13

		PH-91201	PL9120	
		PH-91202	PL9120	
	LAN	PB20101	PL9120	
		PH-28001	PL2800/PL2810PSA	
	/	PH-48001	PK4800	
	/	PH-48002	PK4800	
		AD2600	PL2700	12
		AD27002	PH-27002 7	15
		PW2450	PL2450	
		PW2550	PL2560	
		PW4300	PL2700	
		PW2800	PL2800 / PL2810PSA	
		PM27001	PL2450/2560/2700 32MB	16
		PM27002	PL2450/2560/2700 64MB	16
		PM2810	PL2810 64MB	
		PM48001	PK4800	
		PM48002	PK4800	
	LAN	PB20002A	PL2450/2560/2700	17
	LAN	PB20011A	PL2450/2560/2700	17
	LAN	PB2170	PL2170	
	LAN	PB40002	PK3000/2000 PL9120	
	KEIS	PB20701A	PL2700	
	KEIS	PB20702	PL2450 2560	
		PA2560	PL2450/PL2560	17 18
		PA2700	PL2700	17 18
		PA28101	PL2810	
	PostScript	PA28102	PL2810 2	
	PostScript	PA28103	PL2810 3	
	PostScript	PA48002	PK4800	
		PG48001	PK4800	
		PG48002	PK4800	
		PG48003	PK4800	
		PG48005	PK4800	

□ □	□ □	□ □	□ □
□ □ □ □ □ □ □ □ □ □ □ □	□ □ □ □ □ □ □ □	PF4110	PK3000/ 3000N/ 3500N □
		PF4120	PK2000/ 2000N/ 2500N □
		PF47001	PK4700N □
		PF47002	PK4700N □
		PF47003	PK4700N □
	□ □ □ □ □ □	PM4110	PK3000/ 3000N/ 3500N □
		PM4120	PK2000/ 2000N/ 2500N □
		PM4700	PK4700N □
	□ □ □ □ □ □	PM41101	PK3000/ 3000N/ 3500N/ 2000/ 2000N/ 2500N □ 64MB
		PM42101	PK3500N/ 2500N □ 128MB
		PM47001	PK4700N □ 64MB
		PM47002	PK4700N □ 128MB
	LAN □ □ □ □	PB40002	PK3000/ 2000/ PL9120 □
	□ □ □ □ □ □ □ □ □	PA42101	PK3500N/ 2500N □
		PA47001	PK4700N □
	□ □ □ □ □ □	AD4110	PK3000/ 3000N/ 3500N □
		AD4700	PK4700N □
	□ □ □ □ □ □ □ □	PA41101	PK3000/ 3000N/ 3500N □
		PA41201	PK2000/ 2000N/ 2500N □
	LFU □ □ □ □	PA41103	PK3000/ 3000N/ 3500N □
		PA41203	PK2000/ 2000N/ 2500N □
	A4 □ □ □ □	PA41102	PK3000/ 3000N/ 3500N □

LAN	LAN	CNB300	LAN
	TP	LAN-LNTTF	
		HN-1312-12	
	(HUB)	HN-1332-08B	
		HN-1332-16	
		HN-1332-16A	
		HN-1352-08	
		LAN-LNRP8A	
		LAN-LNRP16A	
		LAN-LNFRP8A	
	SNMP	LAN-LNRP12	
	HUB	HN-F1332-1	
	HUB	HN-1342-08	
		HN-1342-16	
		HN-1342-16A	
		HN-1362-08	
	HUB	PC-BH7500	
	HS30	HN-1801-08	
	HS30	HN-1801-16	
	HS50	HN-1805-10	
	HS100	HN-1811-10	
	HS100	HN-1811-10A	
	HS100	HN-1811-10F	
	HS150	HN-1815-10	19
	HS150	HN-1815-10A	19
	HS150	HN-1815-20	19
	HS150	HN-1815-20A	19
	HS150	HN-1815-31	
	HS150	HN-1815-32	
	HS200	HN-1821-10A	
	HS200	HN-1822-10A	
	HS200	HN-F1821-12	
	HS200	HN-F1821-31A	
	HS200	HN-F1821-32E	
		LAN-LNF2SW6A	19
		LAN-LNFR2SWA	
		LAN-LNFR8SWA	19

		LP1101	PD2080/ 2130/ 2161/ 4080S/ 4081/ 4130/ 3161 PL2170/ 2450/ 2560/ 2700/ 2810/ PK2000/ 2000N/ 2500N/ 3000/ 3000N/ 3500N/ 4700N PK4800	
		LP20301	PB20301	20
		HT-4996-66E	PN5200/ 5400/ 5600/ 5600P	
		HT-4996-66H	PL9120	
		LM1111	4.0m	
		LM1100	2.0m	
	RS-232-C	LR1111	4.0m	
		LR1100	2.0m	
	SCSI	LE3080		
		HN-F1332-16	HUB16	
	TP (3m) (6m) (15m) (30m) (100m)	LNW03CQ5		
		LNW06CQ5		
		LNW15CQ5		
		LNW30CQ5		
		LNW100CQ5		

4:
5: 2
6:
7:
8:
9: 1
10: 3
11: 2
12:
13:
14: 2000 500 × 2
15: 7 7
16: 1
17: LAN 1
18:
19: 100BASE-TX/10BASE-T LAN 10BASE-T
20:
PC-LP20301

20 30

参照

→

Windows

Windows HDD

20

( )

AC

20 AC

Windows 98 MS-DOS

OFF ON 20

20

HDD CD-ROM CD-R/RW DVD-ROM&CD-R/RW

( )

( )

5 35 5

5

HDD

HDD

HDD HDD HDD HDD

HDD	
GB	× 1000000000

–

– 60 °C

[illegible]

C

CD-R/RW [illegible] 50, 53, 68
CD-ROM [illegible] 52
CD-ROM [illegible] 50, 52, 68

D

DVD-ROM [illegible] 50, 54

U

Universal Serial Bus 31, 32
USB [illegible] 31

[illegible]
[illegible] 13

[illegible]
[illegible] 19

[illegible]
[illegible] 20
[illegible] 25

[illegible]
[illegible] 20

[illegible]
[illegible] 19

[illegible]
[illegible] 68

[illegible]
[illegible] 34
[illegible] 19
[illegible] 19

[illegible]
[illegible] 67

[illegible]
[illegible] 16, 22
[illegible] 55
[illegible] 49, 68

[illegible]
[illegible] 25

[illegible]
[illegible] 18

[illegible]
[illegible] 25
[illegible] 48
[illegible] 34

[illegible]
[illegible] 58

Microsoft MS-DOS Windows Microsoft Corp.
Intel Intel Corporation

2002 5

243-0435 810

Copyright © Hitachi,Ltd. 2002. All rights reserved.

NS0303000-1

HITACHI FLORA 220W NS3

ハードウェアを使いこなす

HITACHI

NS0303000-1